Product: KLUDI MX single lever sink mixer DN 15

Ref.: 39904..62

Product description

single lever sink mixer DN 15
single hole mounted
open ring lever
ceramic cartridge with hot water safety device
cascade aerator M 24 x 1
flow class A
swivelling spout (360°)
flexible high pressure supply tubes 3/8 inch
rapid installation set
noise group I, P-IX 18638/IA

Finishes:
05 chrome
82 chrome/mocca
92 chrome/white

Product picture

Advertisement

single lever sink mixer, manufacturer KLUDI GmbH & Co KG
KLUDI MX item no. 39904..62
type: single lever sink mixer DN 15 / PN 10 with swivel spout (360°), made of brass, finishes selectable: 05 = chrome; 82 = chrome/mocca; 92 = chrome/white, open ring lever made out of metal, ceramic cartridge K-41 with hot water safety device, cascade aerator M 24 x 1, flow rate 9,5 l/min at 3 bar, flexible high pressure supply tubes 3/8 inch with DVGW / W270 approval, rapid installation set
noise level DIN EN 4109 noise group I, report no. P-IX 18638/IA
dimensions: height: 220 mm, nozzle height: 166 mm, projection: 210 mm, lever projection: 108 mm

Dimensional drawing

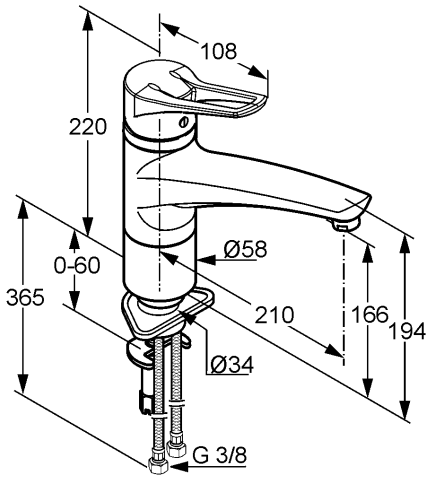

Flow rate diagram

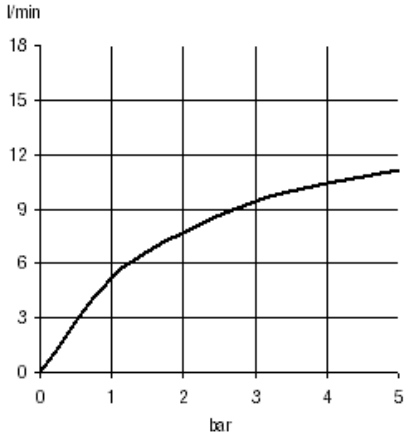

flow class A