Technische Daten/ Technical Data

KLUDI DECUS
single lever basin mixer 85
DN 15

Ref.: 54266N575

Finishes:
N5 Stainless Brushed Nickel PVD

Product description
Manufacturer KLUDI GmbH & Co. KG
Typ: KLUDI DECUS
single lever basin mixer 85
Ref.: 54266N575

basin mixer
single lever mixer
1-hole mounted
solid lever, metal
aerator, S-Pointer M18,5 PCA
ceramic cartridge with hot water safety device
flow rate at 3 bar 4,5 l/min.
flexible hoses G3/8 DVGW approved
rapid installation set
push open waste G1 1/4
for washbasin with overflow
EU taxonomy: max. 6 l/min. -
Substantial Contribution (SC) possible

Produktabbildung/ Product picture

Maßzeichnung/ Dimensional drawing

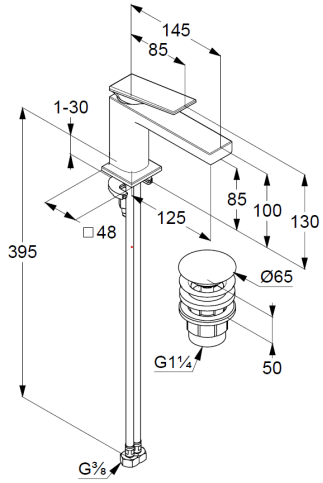
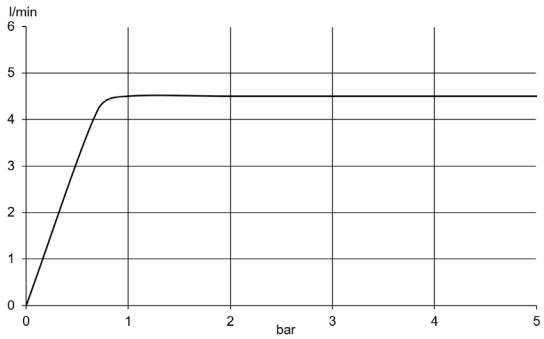
Durchfluss/ Flow rate