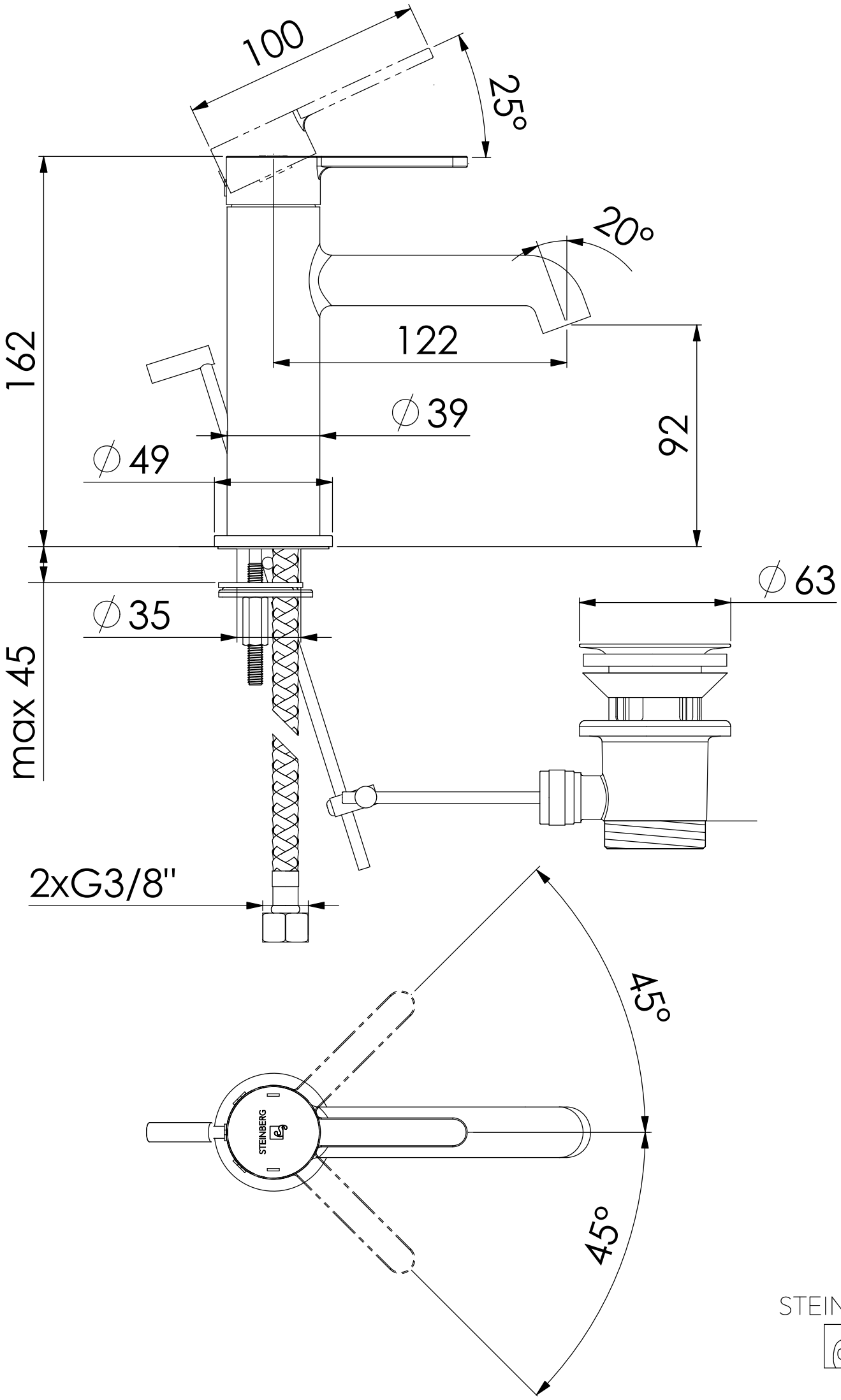

STEINBERG